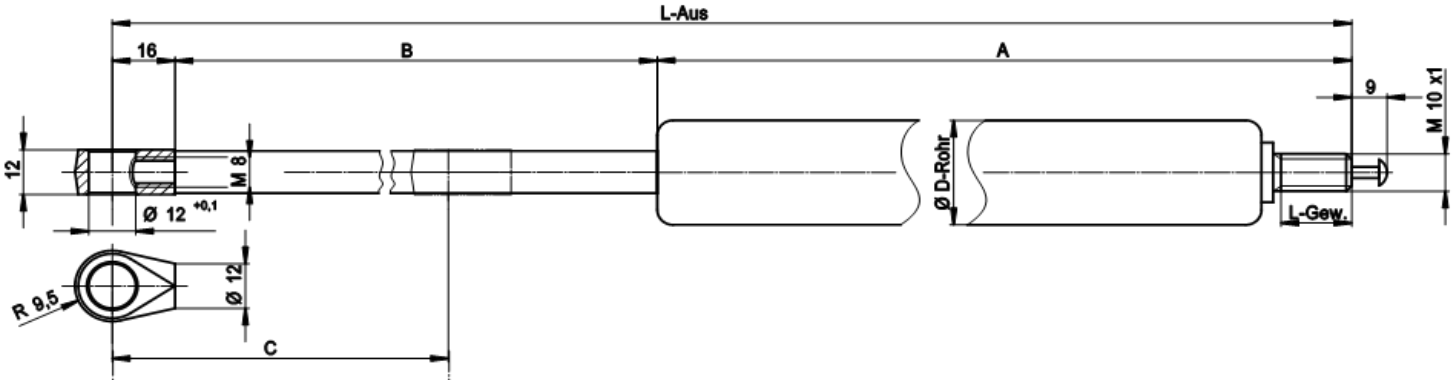

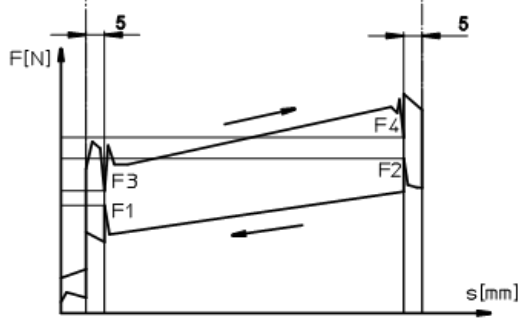

Drawing is not true to scale

Function:

* Locking: Pin completely released
* Unlocking: Activate release pin

Information about forces:

* Slide in force and extension force measured at 20°C with piston rod pointing downward
* F1 to F4 are static forces, measuring points approached at 4 mm/s

Locking:

* Rigidly locking under tension up to 200 N
* Rigidly locking under compression up to 3000 N

Load limit in locked condition:

* Max. admissible load under tension 200 N
* Max. admissible load under compression 3000 N

L-Aus (Extended length) [mm]:	611,0 +2 -2
A-dim [mm]:	393,0 +1
B-dim [mm]:	202,0 +1 -1
C-dim (rod travel not to exceed) [mm]:	202,0 +2
L-Gew. (Length of thread) [mm]:	18,0 +2
D-Rohr (Tube dia.) [mm]:	28 +0.5 -0.2
F1[N]:	200 +40 -20
F4 [N]:	(375)
release-travel gasspring [max. mm]:	3,5
release-force gasspring [max. N]:	85
Progressivity (i.e. F2/F1) [--]:	(~1,3)
Cross section of damping [mm²]:	(1,5)
Extension speed [m/s]:	(0,16)

Information to surfaces:

* Tube painted black (RAL 9005)
* piston rod chrome coated
* Corrosion resistance 120 hrs., tested acc. to DIN EN ISO 6270-2

Installation instructions:

* Installation position: Piston rod pointing downward
* Application temperature range from -30°C to 80°C
* Please protect gas cylinder, piston rod and seal assembly against contamination and mechanical damage
* When installed, no side loads should act on the gas cylinder!
* Before disposing of the gas cylinder it must be depressurized!
* Consider storage information GN 37 and disposal information GN 38

This drawing is our propery! Without our approval it should not be copied, handed over to third parties or subject to any unauthorized use (DIN ISO 16016)

SUSPA

Customer:		
-		
designed by:Serie	Designation:	Part No.:
10.06.2014	**18-1-393-202-200N**	**01800146B**