METAL MAGNETIC TOUCH LATCH ML-ZN80

Passed 100,000 open/close private cycle test

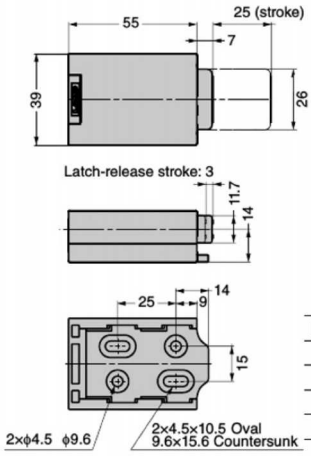

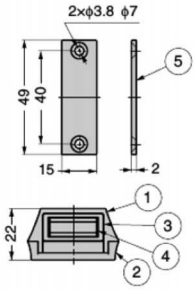

No.	Part Name	Material	Finish
①	Body	Zinc Alloy (ZDC)	Enamel Finish
②	Mounting Plate		
③	Latch	Polyamide (PA)	–
④	Magnet	Ferrite	
⑤	Strike Plate	Stainless Steel	Barrel Polished

- The body is made of metal for high durability.
- Designed for use on large doors due to its strong push force.
- Uses flame retardant plastic rated UL94V-0.
- The magnet part has an allowance of 1.5° on each side to catch the strike plate correctly.
  This helps the magnet to adjust even if there is a slight misalignment.
- The screws for the mounting plate are designed to be hidden from view.
- For overlay doors, please make sure there is correct clearance between the door and side board as shown in the drawings below.

[Application]
- Walk-in closets, concealed doors.

[Remarks]
- The magnetic force may vary. Please comfirm with actual products before use.
- Please install the body at the height where people are supposed to push.
- Please use hinges which do not have catch functions.

[Parts Included]
- Cross-recessed tapping screw M4 × 16
- Cross-recessed tapping screw M3 × 16

Video Link

[Installation]
- Inset Doors
- Overlay Doors

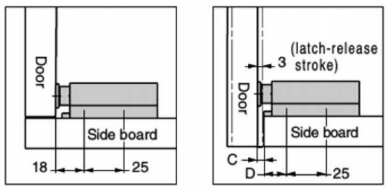

[Dimension]

C (mm)	D (mm)
3	15
4	14

Please make sure there is the "C clearance" on the side board.
It makes the installation easier to align the edge of the body to the edge of the side board.

RoHS	CAD	Item Code	Item Name	Colour	Magnetic Force N	Magnetic Force kgf	Push Force N	Push Force kgf	Max. Door Specs (reference) Height (mm)	Width (mm)	Weight (kg)	Weight (g)	Box (pcs)	Carton (pcs)
G	3D	140-043-880	ML-ZN80BL	Black	29.4	3	49	5	2440	915	125	160	10	100
G	3D	140-043-881	ML-ZN80WT	White									10	100
G	3D	140-056-849	ML-ZN80BR	Brown									10	100

MAGNETIC TOUCH LATCH ML-120

Passed 50,000 open/close private cycle test

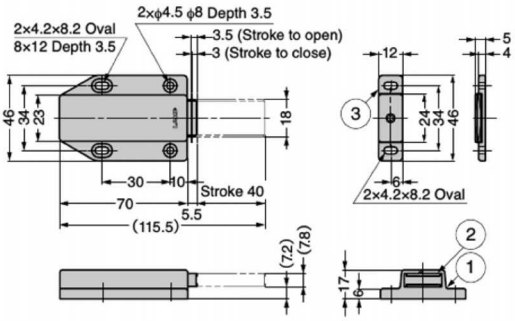

- Large stroke. Can also be used for heavy doors or large doors (tested with W600×H1800×t30 door).
- Lightly push to open the door.
- When closing, magnet will catch the door by lightly pushing.
- Counter plate is movable.

[Remarks]
- Be sure to read the "Cautions" 1.
- Please use hinges without catch. (Or hinges with catch may cause malfunction).
- Do not use as a door stopper.Excessive force may cause damage.
- Pay attention to not pinching fingers when using with a small door.

[Parts Included]
- Counter plate
- Countersunk head tapping screw 4×16

[Inset door] **[Overlay door]**

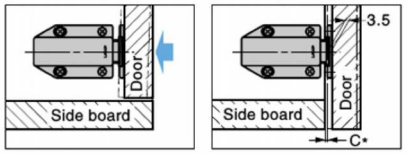

* without including thickness of mounting plate.

To ensure a push-in allowance of 3.5mm or above in the latch part as shown, please leave a clearance C between door and side board.

RoHS	CAD	Item Code	Item Name	Colour	Magnetic Force N	Magnetic Force kgf	Weight (g)	Box (pcs)	Carton (pcs)
G	3D	140-050-338	ML-120BR	Brown	23.5	2.4	53	20	240
G	3D	140-050-337	ML-120WT	White				20	240
G	3D	140-047-124	ML-120BL	Black				20	240

No.	Part Name	Material	Finish / Colour
①	Body	ABS	Brown, White, Black
②	Yoke	Steel (SPCC)	Coloured Zinc Chromate (trivalent)
③	Counter Plate	ABS/Steel (SPCC)	-Brown/white: Coloured Zinc Chromate (trivalent) -Black: Copper Plating

Refer to 1 : P.431