MAGNETIC TOUCH LATCH MC-S60

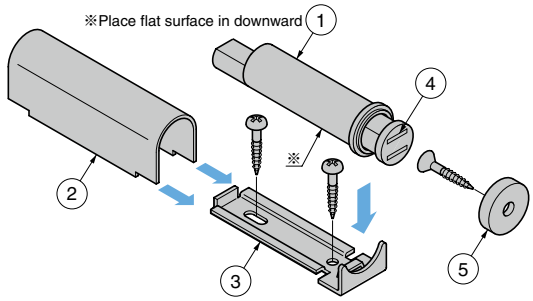

- Can be used for overlay and inset door.
- Stylish design with stainless steel cover.

[Remarks]
- Be sure to read the "Cautions" 1.
- For small doors.Do not use for large doors.
- Please use hinges without catch.

[Parts Included]
- Counter plate W12 2
- Pan head wood screw 3.1×13, Countersunk head wood screw 3.8×16

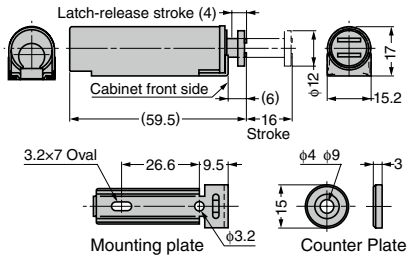

No.	Part Name	Material	Finish / Colour
①	Body	ABS/POM	Brown
②	Cover	Stainless Steel (SUS430)	–
③	Mounting Plate	Steel (SPCC)	Nickel
④	Yoke		
⑤	Counter Plate	Steel (SUM)	

RoHS	CAD	Item Code	Item Name	Magnetic Force N	Magnetic Force kgf	Weight (g)	Box (pcs)	Carton (pcs)
G	3D	140-050-129	MC-S60	10.8	1.1	28.5	30	600

Refer to 1 : P.431, 2 : P.464

MAGNETIC TOUCH LATCH (MORTISE TYPE) MC-U60

- For overlay doors: Can be embedded in the edge of side board, etc.

[Remarks]
- Be sure to read the "Cautions" 1.
- Please provide a ϕ15 counterbore of 3~5mm deep at the door for installing the counter plate (for the relation between counterbore depth A and door clearance B, see "Cut Out Dimensions" in the lower left).
- For small overlay door.Do not use for large doors.
- Please use hinges without catch.

[Parts Included]
- Counter plate W12 2
- Pan head wood screw 2.9×13, Countersunk head wood screw 3.8×16

[Cut Out Dimensions]

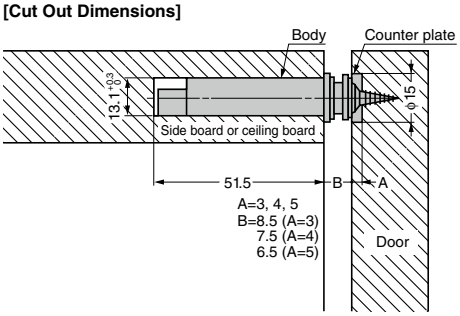

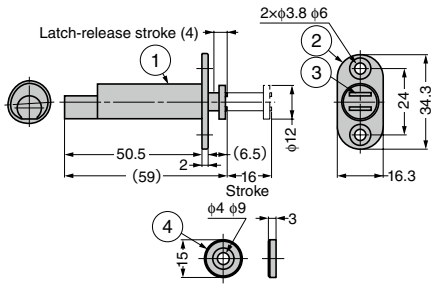

No.	Part Name	Material	Finish / Colour
①	Body	ABS/POM	Brown
②	Mounting Plate	Stainless Steel (SUS430)	–
③	Yoke	Steel (SPCC)	Nickel
④	Counter Plate	Steel (SUM)	

RoHS	CAD	Item Code	Item Name	Magnetic Force N	Magnetic Force kgf	Weight (g)	Box (pcs)	Carton (pcs)
G	3D	140-050-016	MC-U60	10.8	1.1	19	30	600

Refer to 1 : P.431, 2 : P.464