3-WAY ADJUSTABLE CONCEALED HINGE HES3D-70

INSTRUCTION

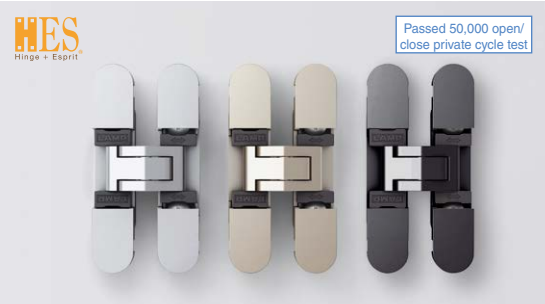

Selection Tool

Hinge Selection

Video Link

- Small HES series can be applied with Min. door thickness of 19mm.
- Small bore depth, easy to cut out the door and frame.
- 3-way adjustment function allows vertical, horizontal, and depth adjustment after hinge installed.
- Hinge can be split into the door side and the frame side.

[Remarks]

- Can not be used with LAPCON DOOR DAMPER LDD 1 or LAPCON DOOR CLOSER LDC-N2.
- Use below opening angle 180˚ .
- Can not be used with lid stays or door damper.

[Parts Included]

- Countersunk head tapping screw 4×20 (4 pcs/hinge) SUS
- Hex key 2

Figure below shows the state with the upper screw covers removed.

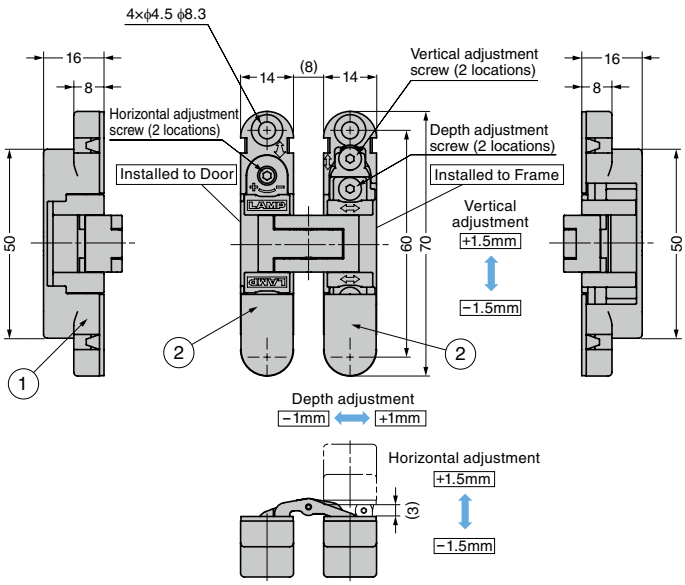

[Locus Chart]

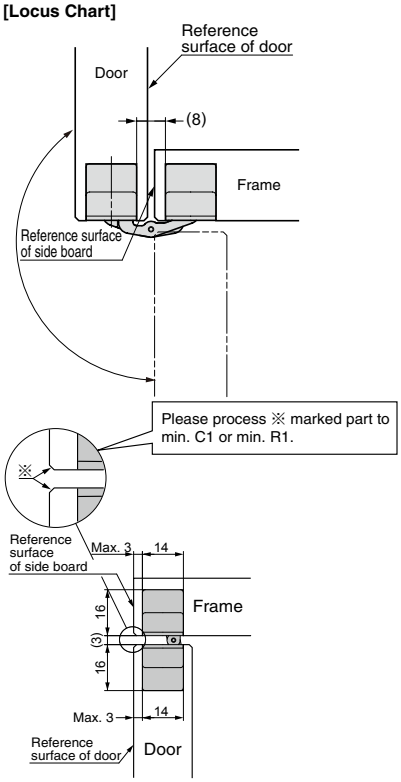

[Cut Out Dimensions]

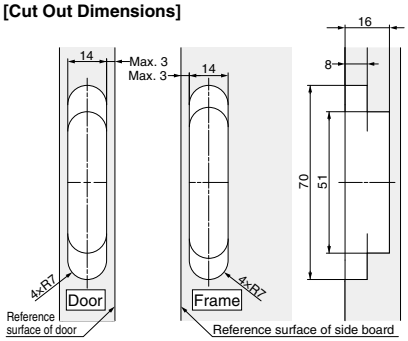

No.	Part Name	Material	Finish		
			DC	DN	BL
①	Body	Zinc Alloy (ZDC)	Satin Chrome	Dull Nickel	Black Paint
②	Cover (2 pairs)	ABS	Silver Paint	Champagne Gold Paint	Black

RoHS	CAD	Item Code	Item Name	Colour	Door Width	Door Height	Door Thickness	Door Weight kg/2pcs	Door Weight kg/3pcs	Opening Angle	Weight (g)	Box (pcs)	Carton (pcs)
G	3D	170-035-441	HES3D-70DC	Silver	Max. 600	Max. 1200	Min. 19	Max. 9	Max. 12	180˚	95	2	48
G	3D	170-035-442	HES3D-70DN	Champagne Gold								2	48
G	3D	170-035-443	HES3D-70BL	Black								2	48

Refer to 1 : P.532, P.536