R6 Hinge

Concealed · Hold-open style

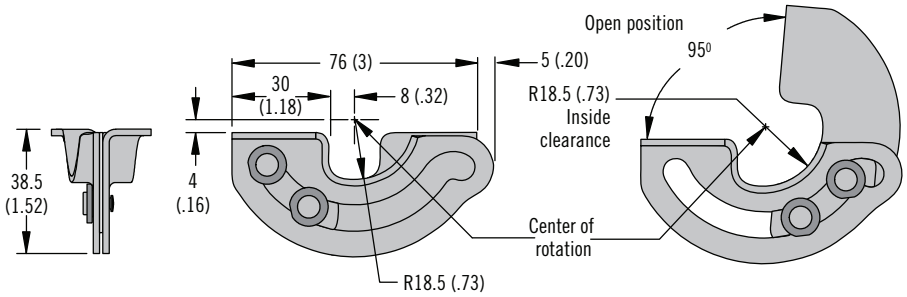

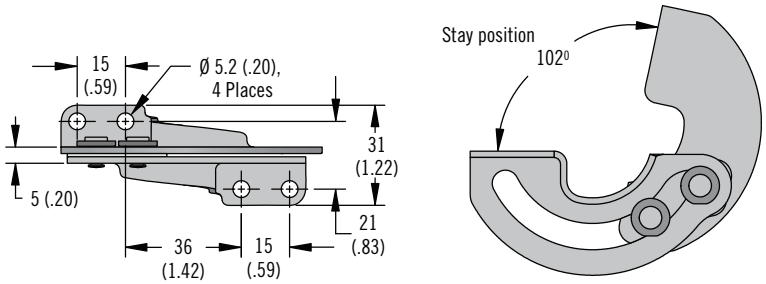

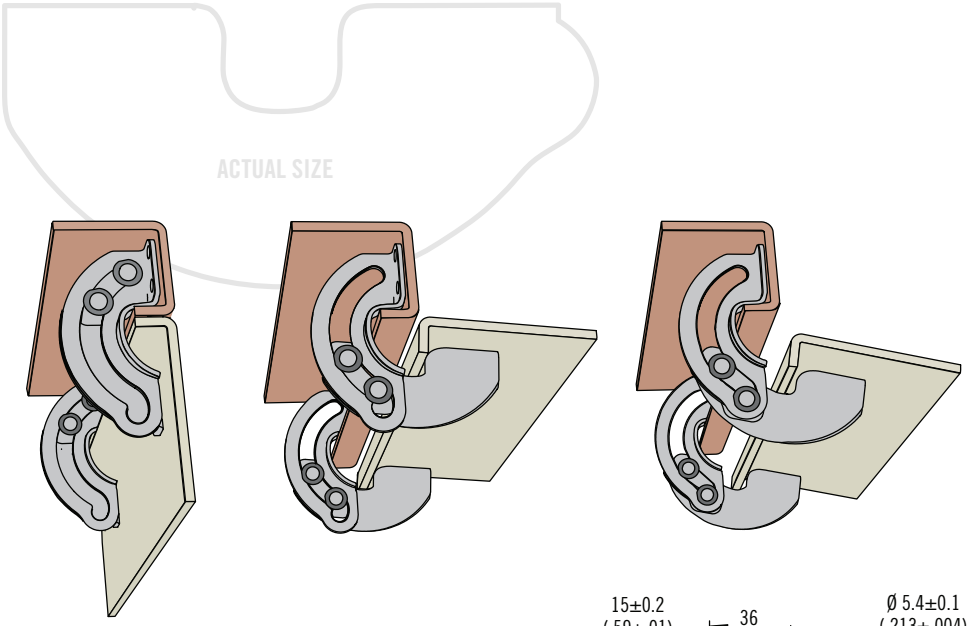

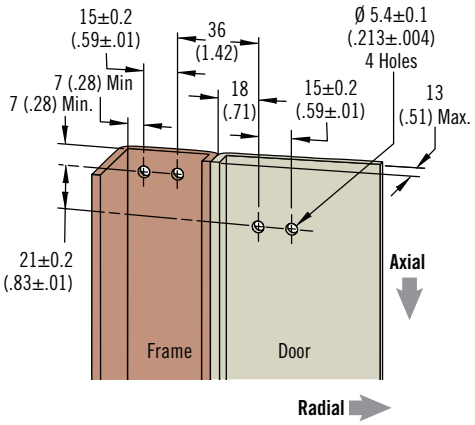

Part Number	
Steel	R6-22-11
Stainless steel	R6-22-23

- **Invisible when door is closed**
- **Holds doors open without secondary mechanical support**

Material and Finish

Steel, zinc plated, or stainless steel

Performance Details

*(loads applied with hinge in stay position)

Zinc Plated Steel

Radial load:
Max. static load: 155 N (35 lbf)
Average ultimate load: 405 N (91 lbf)

Axial load:
Max. static load: 200 N (45 lbf)
Average ultimate load: 415 N (93 lbf)

Max. holding torque:
11.8 N•m (104 in•lbf)

Operating temperature range:
-40ºC (-40ºF) to 85ºC (185ºF)

Stainless Steel

Radial load:
Max. static load: 280 N (63 lbf)
Average ultimate load:
570 N (128 lbf)*

Axial load:
Max. static load: 305 N (69 lbf)
Average ultimate load:
430 N (97 lbf)

Max. holding torque:
18.2 N•m (161 in•lbf)*

Operating temperature range:
-40º C (-40º F) to 85º C (185º F)

Installation Notes

Panel thickness exceeding 4 (.16) will require a 45˚ chamfer on both door and frame.

Part Number

See table

southco®
CONNECT · CREATE · INNOVATE

Dimensions in millimeters (inch) unless otherwise stated

INFO CLIC www.southco.com/R6