REVISION HISTORY			
REV	DATE	BY	DESCRIPTION
B	15MAY2018	ACS/GGG	PRN: P2018-1189

NOTES:

A. MATERIAL AND FINISH:
HOUSINGS: GLASS FILLED NYLON, LATCH BOLT: ACETAL, INTERNAL COMPONENTS: ACETAL, AND METAL COMPONENTS

B. ELECTRICAL SPECIFICATIONS:
OPERATING VOLTAGE: 5±0.5 VDC
TYPICAL OPERATING CURRENT: LESS THEN 0.3A, PEAK / STALL CURRENT: 0.5A MAX
TOTAL STANDBY CURRENT: RETRACTED: 0 AMPS, EXTENDED: 0 AMPS
CAUTION! NO STALL PROTECTION IS PROVIDED IN LATCH. USE APPROPRIATE CIRCUIT PROTECTION.
MINIMUM EXTEND/RETRACT PULSE WIDTH TO EXTEND/RETRACT: 600 ms
OPERATING TEMPERATURE RANGE: 0C TO 60C NON-ICING, NON-CONDENSING ENVIRONMENT
OPERATING HUMIDITY: 85% MAX.
NOT INTENDED FOR DIRECT EXPOSURE TO OUTDOOR ELEMENTS.

C. ELECTRICAL CONNECTIONS AND HOOKUP:
A BASIC SPDT SWITCH CONTROL ELECTRICAL HOOKUP DIAGRAM IS PROVIDED FOR REFERENCE.
CONSULT WITH A SOUTHCO REPRESENTATIVE FOR ADDITIONAL ELECTRICAL HOOKUP INFORMATION.
- CONNECT GROUND, AND CONTROL SIGNAL WIRES TO AN APPROPRIATE CONTROLLER AND DC POWER SUPPLY
- A DC POWER SUPPLY CAPABLE OF SUPPLYING 5±0.5 VDC AT 1 AMP MINIMUM PER LATCH IS RECOMMENDED
- POWER MUST BE AVAILABLE TO OPERATE THE LATCH AND MUST REMAIN AVAILABLE DURING THE FULL TRANSIT TIME OF THE LATCH DURING EXTENDING OR RETRACTING.

CAUTION! LATCH CAN BE DAMAGED IF WIRED INCORRECTLY, OR IF IMPROPER VOLTAGE IS APPLIED!
WIRE COLOR CODE / CONNECTOR PIN ASSIGNMENT: SEE CONNECTOR PINOUT LOCATION DETAILS
PIN1/BROWN WIRE: GROUND(-)
PIN2/RED WIRE: LATCH BOLT EXTENDED +5V
PIN3/ORANGE WIRE: LATCH BOLT RETRACTED +5V

D. ELECTRICAL OPERATION:
TO OPERATE THE LATCH IN TWO POSITION MODE:
-FOR EXTENDED POSITION: APPLY +5 VDC TO RED WIRE FOR A MINIMUM OF 600ms, THE ORANGE WIRE SHOULD NOT BE CONNECTED(OPEN CIRCUIT) THE LATCH WILL TRANSIT TO THE EXTENDED POSITION ONCE AND STAY THERE.
-FOR RETRACTED POSITION: APPLY +5 VDC TO ORANGE WIRE FOR A MINIMUM OF 600ms, THE RED WIRE SHOULD NOT BE CONNECTED(OPEN CIRCUIT) THE LATCH WILL TRANSIT TO THE RETRACTED POSITION ONCE AND STAY THERE.

CAUTION! TO PREVENT LONG TERM DAMAGE TO THE ELECTRICAL COMPONENTS IT IS IMPORTANT TO NOT STALL THE LATCH BOLT DURING ELECTRICAL OPERATION.
- THE LATCH CANNOT REVERSE A CYCLE.
- THE LATCH MUST BE ALLOWED TO REACH ITS FULLY RETRACTED TRAVEL TO COMPLETE A CYCLE.

TO OPERATE THE LATCH IN TRIGGER MODE:
-TRIGGER COMMAND: LATCH WILL FULLY RETRACT AND THEN IMMEDIATELY EXTEND
CONNECT BROWN WIRE TO GROUND(-), CONNECT RED WIRE TO +5VDC, PROVIDE A +5VDC CONTROL PULSE TO ORANGE WIRE.
CONTROL SIGNAL PULSE REQUIRED ON ORANGE WIRE FOR TRIGGER COMMAND: 5 VDC +/-10%, 500 MILLIAMPS MAX PULSE
MINIMUM PULSE DURATION 300 MILLISECODS
MAXIMUM PULSE DURATION 400 MILLISECONDS

E. OPTIONAL CONNECTOR:
MANUFACTURER: MOLEX, SERIES: MICROFIT 3.0
- CONNECTOR RECEPTICAL, SINGLE ROW, 3 CIRCUITS, 3mm, MOLEX P/N: 43645-0300
- CONTACTS: FEMALE CRIMP TERMINAL (SOCKET) MOLEX P/N: 43030-0004
WIRE: 26 AWG STYLE UL1007/1569
WIRE LENGTH: SEE TABLE FOR AVAILABLE LENGTHS
MATE FOR CONNECTOR (NOT SUPPLIED)
MANUFACTURER: MOLEX, SERIES: MICROFIT 3.0
- CONNECTOR PLUG 3 CIRCUITS 3 mm , MOLEX P/N: 43640-0301
- RECOMMENDED CONTACTS (3 MAX REQUIRED): MOLEX, MALE CRIMP TERMINAL (PIN), MOLEX P/N: 43031-0007
- RECOMMENDED WIRE GAGE: 24 AWG

F. MOUNTING:
-TWO Ø3.3MM THROUGH HOLES ARE PROVIDED FOR THROUGH HOLE MOUNTING WITH M3 OR 4-40 BOLTS. (NOT SUPPLIED)
-MAXIMUM ALLOWABLE TORQUE ON THROUGH HOLE M3 OR 4-40 SOCKET HEAD CAP SCREWS 60 N.cm [5.3 in.lb]

G. PACKAGED IN INDIVIDUAL BAGS OR ADD -1 TO PART NUMBER FOR BULK PACKAGING
EXAMPLE: EM-05-52-2001 INDIVIDUAL PACKAGE
EM-05-52-2001-1 BULK PACKAGE

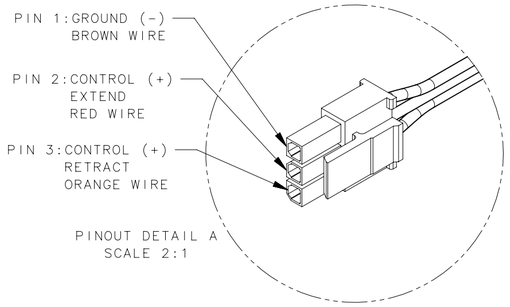

PINOUT DETAIL A
SCALE 2:1

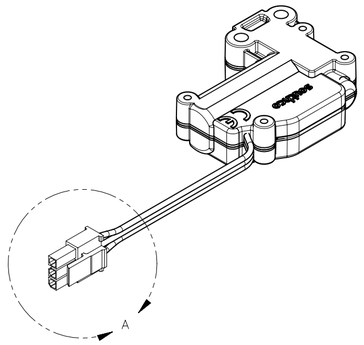

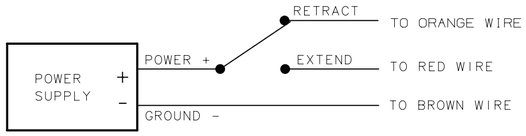

ELECTRICAL HOOKUP (SPDT SWITCH CONTROL)

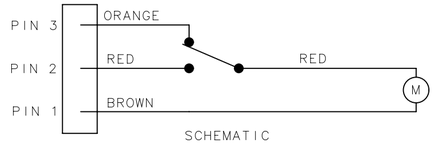

SCHEMATIC

ELECTRO-MECHANICAL SLIDE BOLT
SHOWN LATCH BOLT EXTENDED

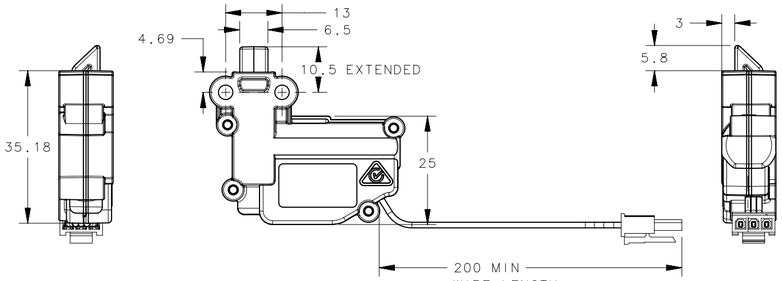

EM-05-53-2001, ELECTRO-MECHANICAL SLIDE BOLT
LATCH BOLT UP DIRECTION, WITH CONNECTOR

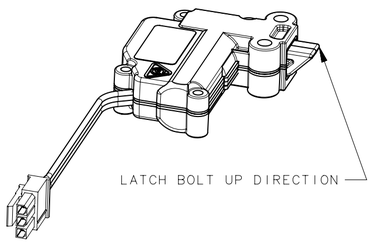

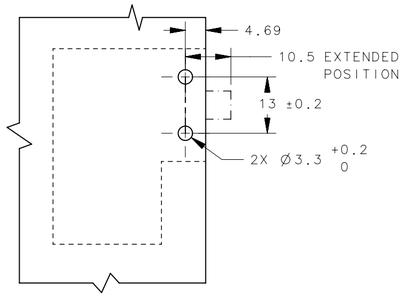

PANEL PREPARATION

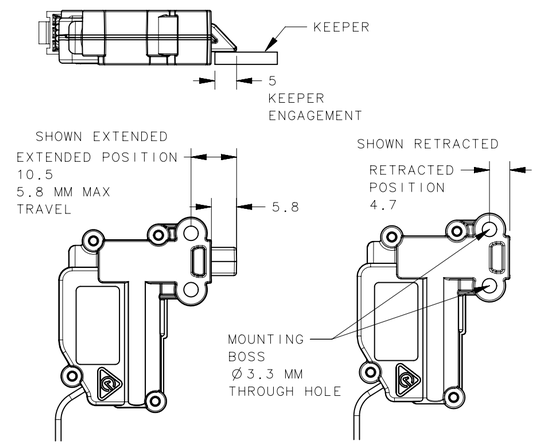

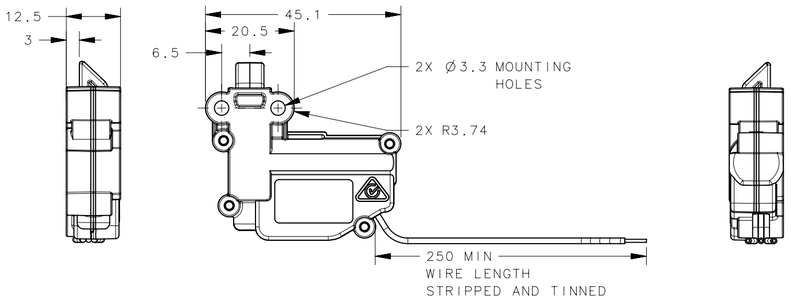

EM-05-52-2002, ELECTRO-MECHANICAL SLIDE BOLT
LATCH BOLT DOWN DIRECTION, STRIPPED AND TINNED

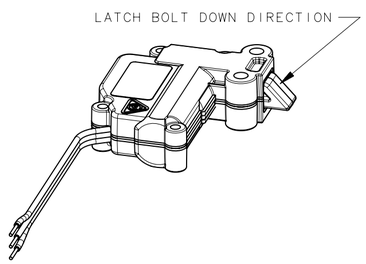

ASSEMBLY PART NUMBER	DESCRIPTION
EM-05-53-2002	5V, ELECTRO-MECHANICAL SLIDE BOLT, UP, STRIPPED AND TINNED
EM-05-53-2001	5V, ELECTRO-MECHANICAL SLIDE BOLT, UP, WITH CONNECTOR
EM-05-52-2002	5V, ELECTRO-MECHANICAL SLIDE BOLT, DOWN, STRIPPED AND TINNED
EM-05-52-2001	5V, ELECTRO-MECHANICAL SLIDE BOLT, DOWN, WITH CONNECTOR

THIRD ANGLE PROJECTION

MILLIMETERS [IN]

TOLERANCES UNLESS OTHERWISE NOTED
ALL DIMENSIONSWITHOUT TOLERANCES ARE FOR REFERENCE ONLY

SURFACE AREA XXXXXmm²
VOLUME XXXXXmm³

PROPRIETARY ITEM
EXCEPT FOR USES EXPRESSLY GRANTED IN WRITING, INFORMATION DISCLOSED HEREON IS CONFIDENTIAL AND ALL RIGHTS, PATENT AND OTHERWISE, ARE RESERVED BY SOUTHCO, INC.

PER ASME Y14.5M-1994

southco®
CONNECT·CREATE·INNOVATE

DESCRIPTION: ELECTRONIC ACCESS SOLUTION
ELECTRO-MECHANICAL SLIDE BOLT

SIZE	SYSTEM	DWG NO.
A2	NX	J-EM-05-5-1

DRAWN BY	DATE	SCALE	SHEET
GGG	04MAY2017	1:1	1 OF 1