NYLON 6/6 UL94 V-2 (RMS-01) COLOR: NATURAL PART NO.	NYLON 6/6 UL94 V-0 (RMS-19) COLOR: NATURAL PART NO.	HOLE DIA. "D"	RECOMMENDED SCREW SIZE
WTLH90-300-4-01	WTLH90-300-4-19	3.2 [.13]	M3 [#4]
WTLH90-300-6-01	WTLH90-300-6-19	3.8 [.15]	M3.5 [#6]
WTLH90300-M4-01	WTLH90300-M4-19	4.3 [.17]	M4

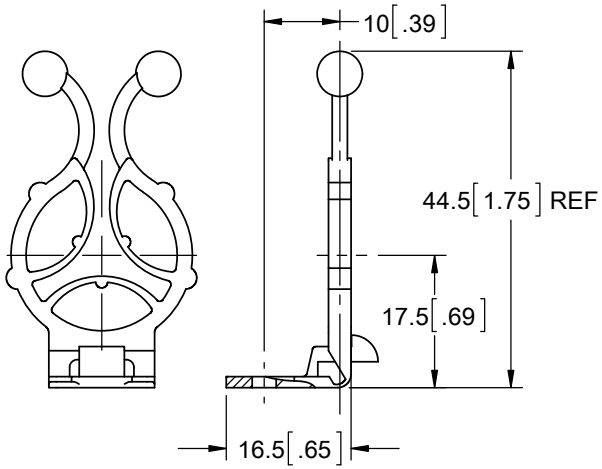

LOCKED

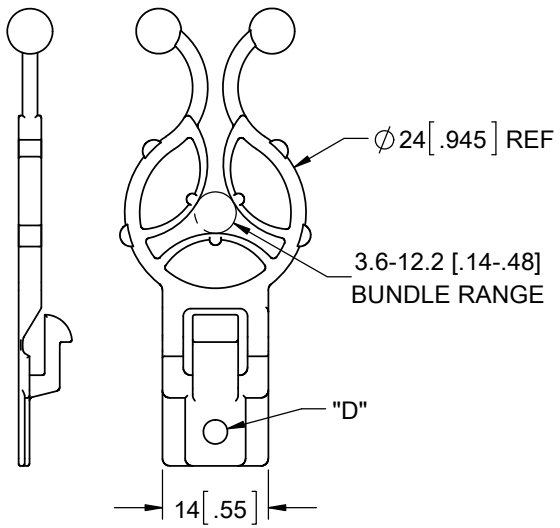

AS MOLDED

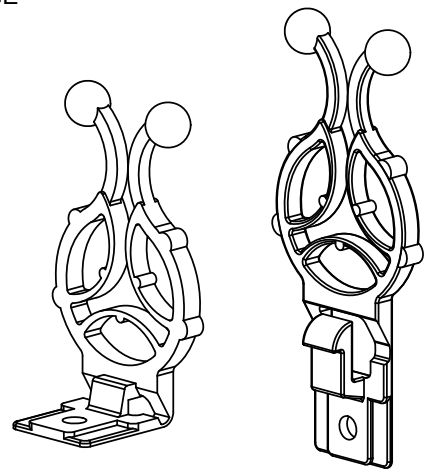

NOTES:
1. ALTERNATE UNITS FOR REFERENCE ONLY

REV.	DESCRIPTION	ENGR.	DATE
H	SEE CO 200773 FOR CHANGES	SK	04/30/12
G	REDRAWN, SEE CO 200760	SK	02/27/2012
-	SEE ENGINEERING FOR REV A TO F	--	-------

TITLE WEBBED TWIST-LOCK-HINGED 90 - 300

UNITS: mm [IN]

CREATED USING SOLIDWORKS

GENERAL TOLERANCE UNLESS NOTED ±0.25 ANG.=±1°

FILE #: WTLH90 | DWN: SK | APP: SK | FINAL

SHEET: 1 OF 1 | SHEET SIZE: A | DT: 02/21/2012 | CHKD: DZ

RE: RICHCO, INC. --

RICHCO, INC.
WWW.RICHCO-INC.COM

PART # SEE TABLE

PRINT TYPE CA