X14146

USED ON

IN COMMERCIAL CONFIDENCE

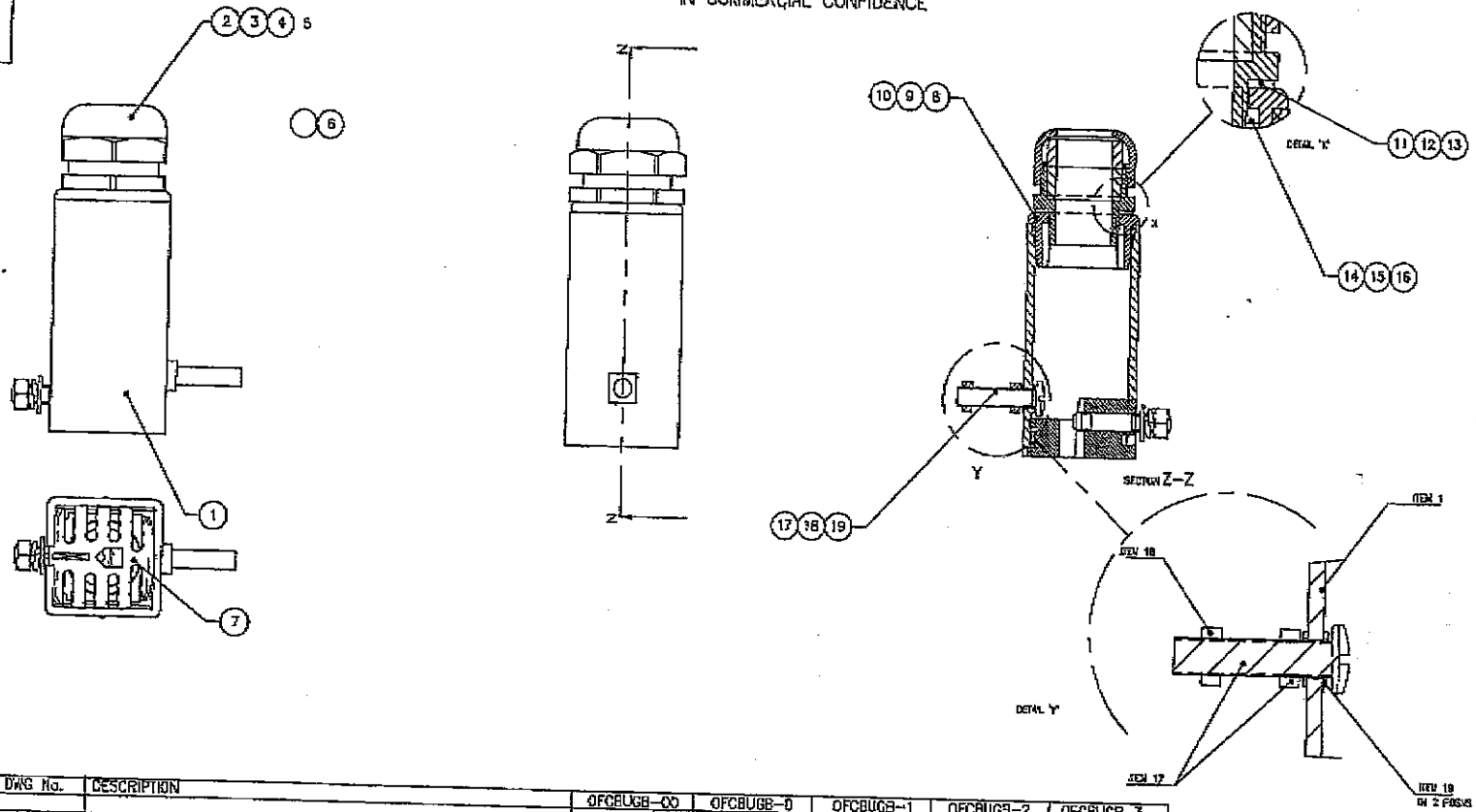

ITEM	DWG No.	DESCRIPTION	OFCBUGB-00	OFCBUGB-0	OFCBUGB-1	OFCBUGB-2	OFCBUGB-3
1	X14280	GRP TUBE 3mm MODIFIED	1	1	1	1	1
2	RS381-523	CABLE GLAND M20x1.5 ø4 to ø6 CABLE	1	–	–	–	–
3	RS381-539	CABLE GLAND M20x1.5 ø7.5 to ø10 CABLE	–	1	–	–	–
4	RS381-545	CABLE GLAND M20x1.5 ø9.5 to ø13.2 CABLE	–	–	1	–	–
5	RS381-551	CABLE GLAND M25x1.5 ø13 to ø18 CABLE	–	–	–	1	–
6	RS382-021	CABLE GLAND M32x1.5 ø17.5 to ø25 CABLE	–	–	–	–	1
7	X14133	CABLE BREAK OUT ASSEMBLY	1	1	1	–	1
8	X14281	CAPLUG ø 21.0 MODIFIED	1	1	1	–	–
9	X14282	CAPLUG ø 26.0 MODIFIED	1	1	1	–	–
10	X14283	CAPLUG ø 33.0 MODIFIED	–	–	–	1	–
11	RS381-523	SEALING WASHER M20 (PART OF ITEM 2,3 OR 4)	–	–	–	–	1
12	RS381-551	SEALING WASHER M25 (PART OF ITEM 5)	1	1	1	1	1
13	RS382-021	SEALING WASHER M32 (PART OF ITEM 6)	–	–	–	1	–
14	RS381-523	LOCKNUT M20 (PART OF ITEM 2,3 OR 4)	–	–	–	–	1
15	RS381-551	LOCKNUT M25 (PART OF ITEM 5)	1	1	1	–	–
16	RS382-021	LOCKNUT M32 (PART OF ITEM 6 & MODIFIED TO X147284)	–	–	–	1	–
17	RS277-711	M8x40 ROOFING BOLT INCL. SQUARE NUT	–	–	–	–	1
18	RS837-258	M8 HEXAGON PLAIN NUT	1	1	1	1	1
19	RS276-897	M8 EXTERNAL LOCKWASHER	1	1	1	1	1

DO NOT SCALE

IF IN DOUBT ASK

C.A.D DO NOT AMEND
SALES DRAWING

TITLE: CBU GLAND BOX

MATERIAL: —

FINISH: —

THIRD ANGLE PROJECTION

UNTOLERANCED DIMENSIONS: ANY DEC. POINT ONE DEC. PLACE TWO DEC. PLACES ANGULAR

ALL DIMENSIONS IN MILLIMETRES

COPYRIGHT NOTE

ISSUE	DATE	CHANGE
D2	30-1-03	SECOND ISSUE
D1	11-2-2	FIRST ISSUE

DRAWN KIN 15/2/02 DO NOT SCALE
CHECKED DRG. No. X14146
DATE 15-2-02
APPROVED