MAT'L: NYLON 6/6 (RMS-01) COLOR: NATURAL PART NO.	MAT'L: NYLON 6/6 FLAME RET. (RMS-19) COLOR: NATURAL PART NO.	DIM. "A"	PANEL THICKNESS
MWSELF-1-4.1-01	MWSELF-1-4.1-19	.16 (4.1)	.063 (1.6)
MWSELF-1-7.7-01	MWSELF-1-7.7-19	.30 (7.7)	

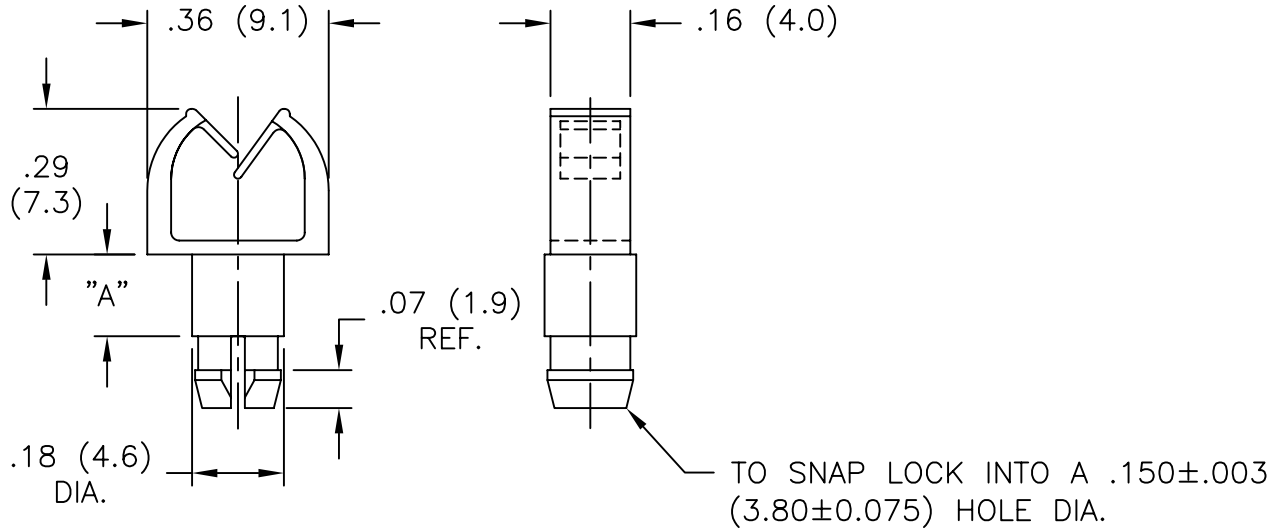

NOTES:

1. PARTS AVAILABLE IN ACETAL (RMS-14)
   BY SPECIAL ORDER ONLY.
   TO ORDER REPLACE "-01" OR "-19" WITH "-14"

REV	DESCRIPTION	ENGR DATE
D	SEE ECN #1362 FOR CHANGES	SK 08.31.07
C	DELETED P/N MWSELF-2 FROM TABLE	DLC 2.28.02
B	ADDED P/N MWSELF-2 TO TABLE	SM 12.21.01
A	REDRAWN FROM UK PRINT (REV A)	SM 12.13.01

TITLE: MICRO WIRE SADDLE-LOCKING FIX

DWG IN IN (MM)

TOLERANCES UNLESS NOTED
.XX=±.010
.XXX=±.005
FRAC=±1/64
ANG=±1°

FILE # MWSELF
MAT'L: SEE NOTES
RE: RICHCO, INC.

DWN: S.M.
DT: 12/13/01

APP:
DT:

RICHCO INC.
PO BOX 804238,CHICAGO,60680
(773) 539-4060

FINAL

PART # SEE TABLE

PRINT TYPE CA