PART NO.	WIDTH "W"	"T" APPLICATION THICKNESS RANGE
MCCGF–1N	.19 (4.8)	.029–.045 (0.7–1.1)
MCCGF–2N		.044–.056 (1.1–1.4)
MCCGF–3N		.055–.069 (1.4–1.7)

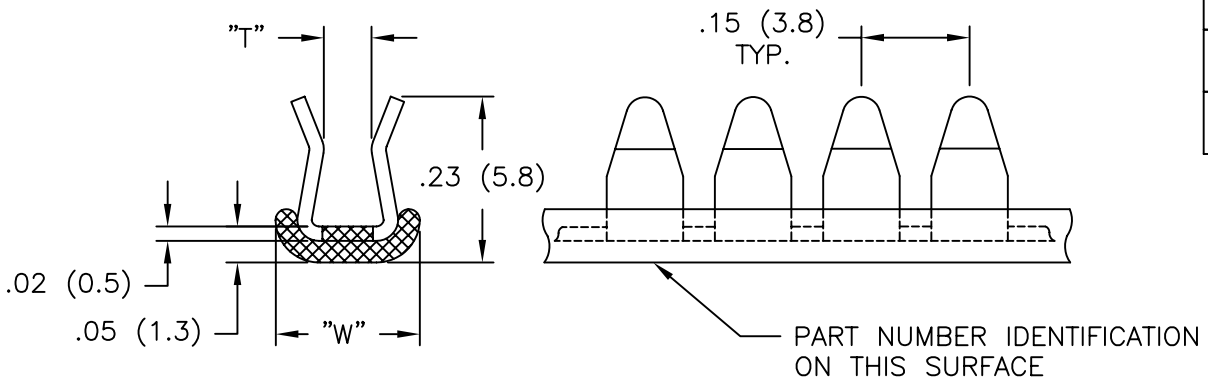

NOTES:

1. MATERIAL: 304 STAINLESS STEEL (RMS–283).
2. COATING: NYLON 11 (RMS–192), COLOR: BLACK.
3. CUSHION: THERMOPLASTIC ELASTOMER, 60 SHORE D (RMS–300), COLOR: BLACK.
   TABER ABRASION RESISTANCE: PER D1044 1kg LOAD,
   C17 WHEEL, 25 mg LOSS AFTER 1000 CYCLES.
4. DIELECTRIC STRENGTH: 1500 VOLTS @ 60 HZ.
5. OPERATING TEMPERATURE RANGE: –40°F TO 185°F (–40°C TO 85°C).
6. SALT SPRAY TESTING: 2000 HOURS, ASTM B117. MIL–STD–202, METHOD 301.
7. FLAMMABILITY: UL 94 V–0 YELLOW CARD NO. E113553 NZMT2.
8. RANDOM SHOCK AND VIBRATION: MIL–STD–1344, METHOD 2005.1, TEST CONDITION VI, LETTER "J".
   DURATION 8 HOURS LONGITUDINAL AND 8 HOURS PERPENDICULAR. rms G 41.7.
9. LENGTH: 100 FT (30.5m) REELS.
10. HAND HELD CUTTING TOOL NEEDED, ORDER P/N : MCGS–1
11. FITS ANY FOUR AXIS CONTOUR.
12. COLOR CODE STRIPE: PRINTING INK (RMS–346).

REV	DESCRIPTION	ENGR	DATE
B	SEE ECN #1284 FOR CHANGES	SK	02.08.07
A	SEE ECN #1283 FOR CHANGES	SK	02.05.07

TITLE: METAL CONTINUOUS CUSHION GROMMET, FLEXIBLE

DWG IN IN (MM)

TOLERANCES UNLESS NOTED
.XX=±.010
.XXX=±.005
FRAC=±1/64
ANG=±1°

FILE # MCCGF
MAT'L: SEE NOTES
RE: RICHCO, INC.

DWN: S.M.
DT: 08.01.02
APP:
DT:

RICHCO INC.
PO BOX 804238,CHICAGO,60680
(773) 539–4060

FINAL

PART # MCCGF SERIES

PRINT TYPE CA