PART NO.	"A"±.010 (±0.25)	"B" REF.	HOLDING "C" DIA.	"D" REF.
HURC–2–01	.20 (5.1)	.49 (12.4)	1/8 (3.2)	.17 (4.3)
HURC–3–01	.24 (6.1)	.56 (14.2)	3/16 (4.8)	.24 (6.1)
HURC–4–01	.27 (6.9)	.62 (15.7)	1/4 (6.4)	.30 (7.6)

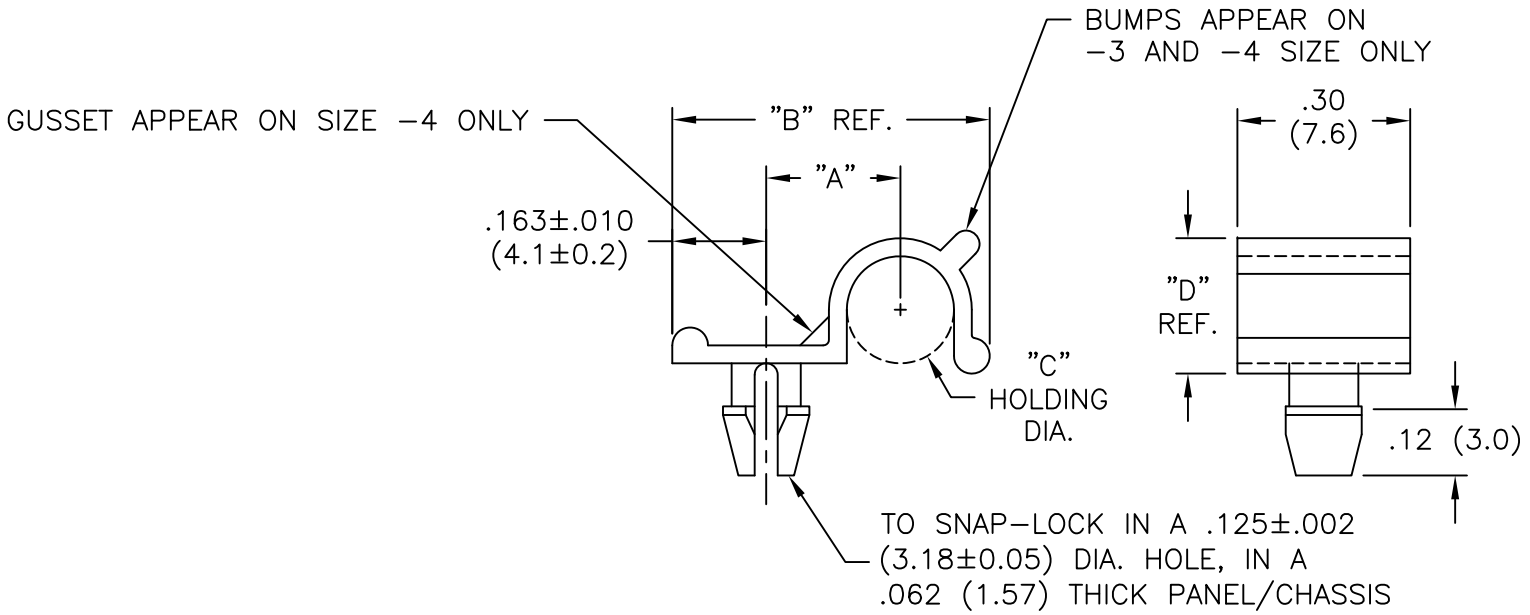

NOTES:
1. MAT'L: NYLON 6/6 (RMS–01).
   FLAME RETARDANT, NYLON (RMS–19).
   AVAILABLE BY SPECIAL ORDER ONLY.
2. COLOR: NATURAL.

REV	DESCRIPTION	ENGR DATE
D	SEE CO 200110 FOR CHANGES	SK 01.18.08
C	CHANGED FILE NUMBER	SM 06.16.02
B	MAT'L RMS–19 ADDED	J.L. 12.29.97
A	CONVERTED TO ACAD	PB 05.31.95

TOLERANCES UNLESS NOTED
.XX=±.010
.XXX=±.005
FRAC=±1/64
ANG=±1°

TITLE: HALF "U" ROUTING CLIP

DWG IN IN (MM)

FILE # HURC–X | DWN: P.B. | APP:
MAT'L: SEE NOTES | DT: 05–31–95 | DT:
RE: RICHCO INC.

RICHCO INC.
PO BOX 804238,CHICAGO,60680
(773) 539–4060

FINAL

PART # SEE TABLE

PRINT TYPE CA