RICHCO PART NO.	WIRE O.D. RANGE	WIRE GA.	"D1"	"D2" REF.	"L1" ±.04 (1.0)	"L2" REF.	"L" ±.04 (1.0)	"T" ±.008 (0.2)
238032	.071–.126 (1.8–3.2)	18–16	.13 (3.2)	.19 (4.7)	.20 (5.0)	.10 (2.5)	.95 (24.0)	.04 (1.0)
238035	.071–.140 (1.8–3.6)	18–14	.14 (3.5)	.18 (4.5)	.20 (5.0)	.12 (3.0)	.95 (24.0)	.04 (1.0)
238040	.091–.140 (2.3–3.6)	16–14	.16 (4.0)	.20 (5.0)	.20 (5.0)	.12 (3.0)	.97 (24.5)	.04 (1.0)
238048	.113–.190 (2.9–4.8)	14–12	.19 (4.8)	.25 (6.3)	.20 (5.0)	.10 (2.5)	.98 (25.0)	.04 (1.0)

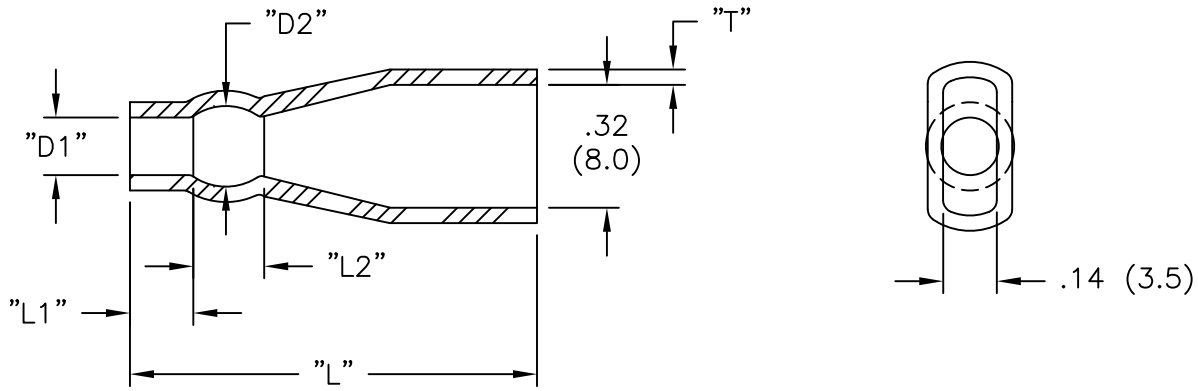

NOTES:
1. MAT'L: SOFT PVC (RMS–55)
   UL YELLOW CARD E81260
2. COLOR: TRANSPARENT BLUE

REV	DESCRIPTION	ENGR DATE
G	SEE CO 200604 FOR CHANGES	SK 12.01.10
F	SEE CO 200041 FOR CHANGES	SK 09.28.07
E	SEE ECN #863 FOR CHANGES	SM 10.04.04
D	CHANGED FILE NO. AND TITLE BLOCK	SM 10.30.02
C	ADDED REF. TO "D2"&"L2" AND TOL. TO "T"	DLC 09.13.01
B	"L1" WAS FROM .20 &"L" WAS FROM 1.06	JB 04.26.96
A	CONVERTED TO ACAD	PB 08.03.94

TITLE: "QUICK FIT" INSULATOR–250 SERIES

DWG IN IN (MM)

TOLERANCES UNLESS NOTED
.XX=±.010
.XXX=±.005
FRAC=±1/64
ANG=±1°

FILE # 2380XX
MAT'L: SEE NOTES
RE: RICHCO, INC.

DWN: P.B.
DT: 08–03–94
CHKD:
ENGR:

RICHCO INC.
PO BOX 804238,CHICAGO,60680
(773) 539–4060

FINAL

PART # SEE TABLE

PRINT TYPE CA