Index	Datum	Revision note	Checked

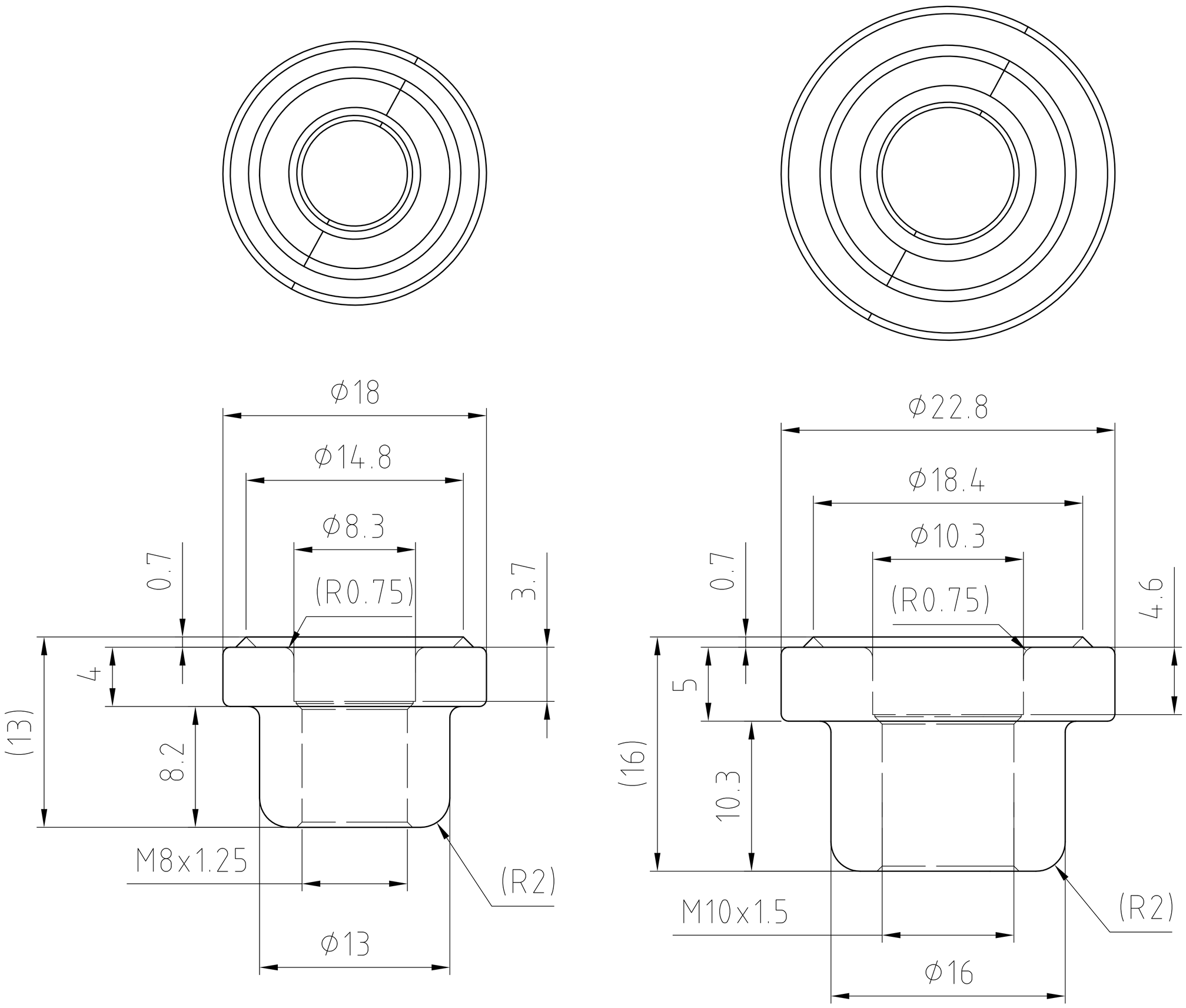

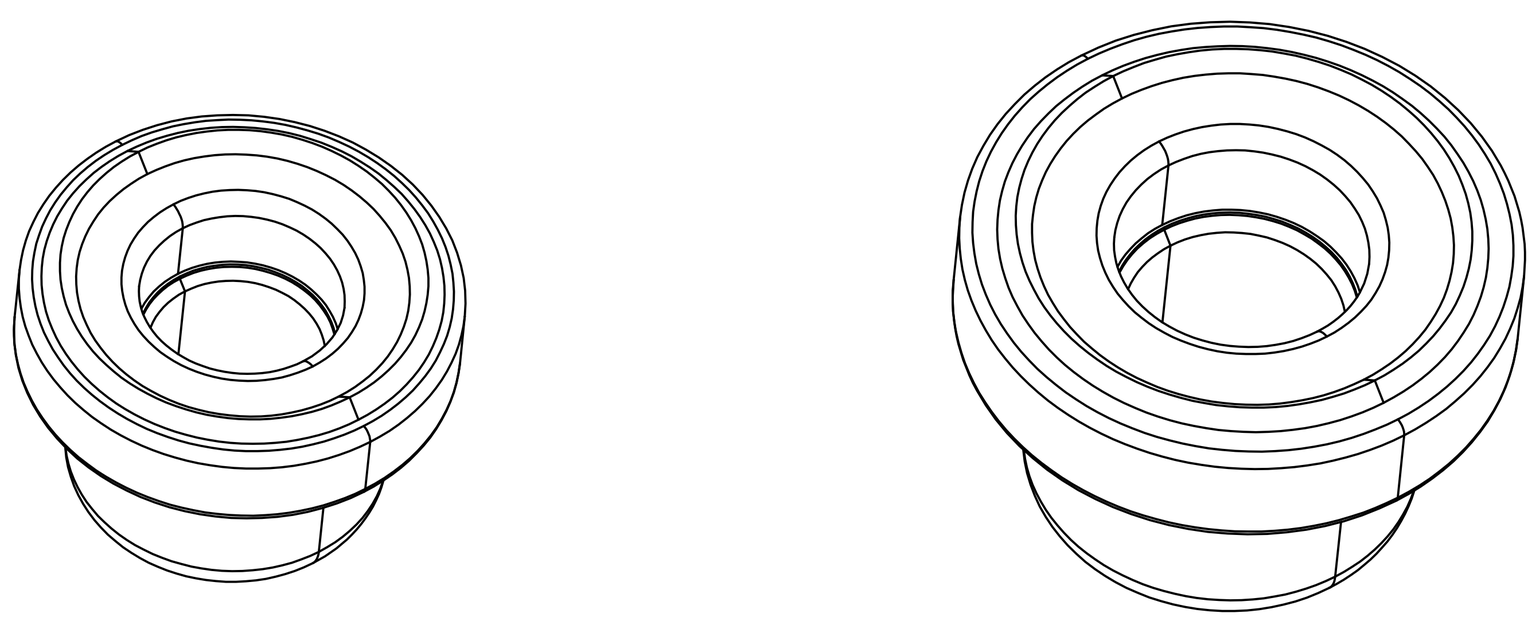

Itemref	Quantity	Title/Name, designation, material, dimension etc	Article No./Reference

Designed by	Date	Checked by - date	Filename	Part index:	Scale
Dobák	2018.02.08.	I	33337277-01- FULL.dwg	00	1:1

Káta CNC Kft

M8x1.25 / M10x1.5 anyák

Hegeszthetö anyák

Edition 0

Sheet 1/1