GN 6336.4 Star knobs with threaded bolt

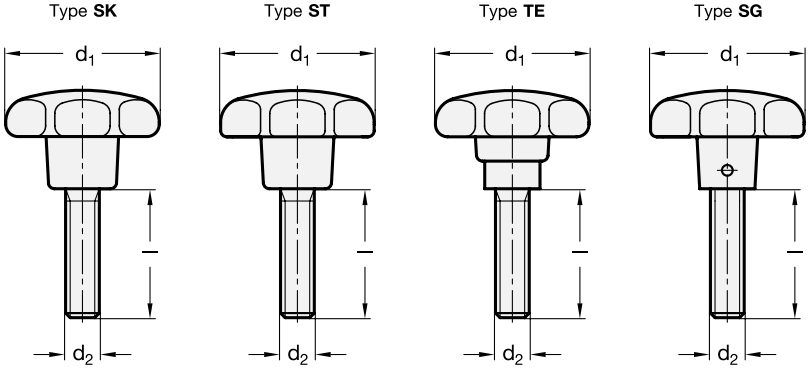

1	Type
SK	Star knob DIN 6336 Plastic (KU) Duroplast (PF)
ST	Star knob DIN 6336 Plastic (KT) Technopolymer
TE	Star knob GN 6336.2 Plastic Technopolymer
SG	Star knob DIN 6336 Cast iron (GG)

2	3	4								4						4				
d_1	d_2	Length **l** Type ST								Length **l** Type SK, SG						Length **l** Type TE				
25	M 5	10	15	20	25	30	-	-	-	-	-	-	-	-	-	-	-	-	-	-
32	M 6	10	16	20	25	30	35	45	60	16	20	25	30	35	45	16	20	25	30	35
40	M 8	16	20	25	30	35	40	50	55	16	20	25	30	40	55	16	20	25	30	45
50	M 10	15	20	25	30	35	40	45	55	25	30	35	45	55	-	25	30	35	45	55
63	M 12	20	25	30	35	40	50	60	-	30	35	40	50	60	-	30	35	40	50	60
80	M 16	-	-	-	-	-	-	-	-	30	40	50	60	70	-	-	-	-	-	-

Specification

- Star knob details and dimensions see:
  - *DIN 6336-KU / KT → Page 335*
  - *GN 6336.2 → Page 336*
  - *DIN 6336-GG → Page 334*
- For Type SK, ST, TE the threaded bolts are zinc plated, blue passivated and moulded in position
- For Type SG the threaded bolt (blackened) is screwed in and secured by a cross-dowel
- RoHS compliant

Information

Should clamping with the bush face be necessary, then it is recommendable to use either Type TE or Type SG.

see also...

- *Star knobs 6336.10 (with brass / plastic thrust pad)*

How to order

GN 6336.4-SK-50-M10-30 (1 = Type, 2 = d_1, 3 = d_2, 4 = Length l)