DWG. NO. X390710250140P

NOTE: ZINC PLATED PER PS 227000, ZNV11
DIMENSIONS: AFTER PLATING
UNSPECIFIED FILLET RADII: MIN 0.25MM

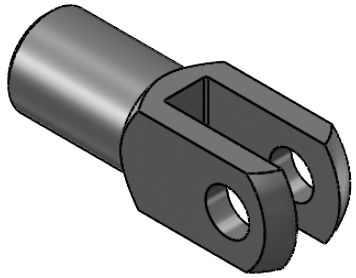

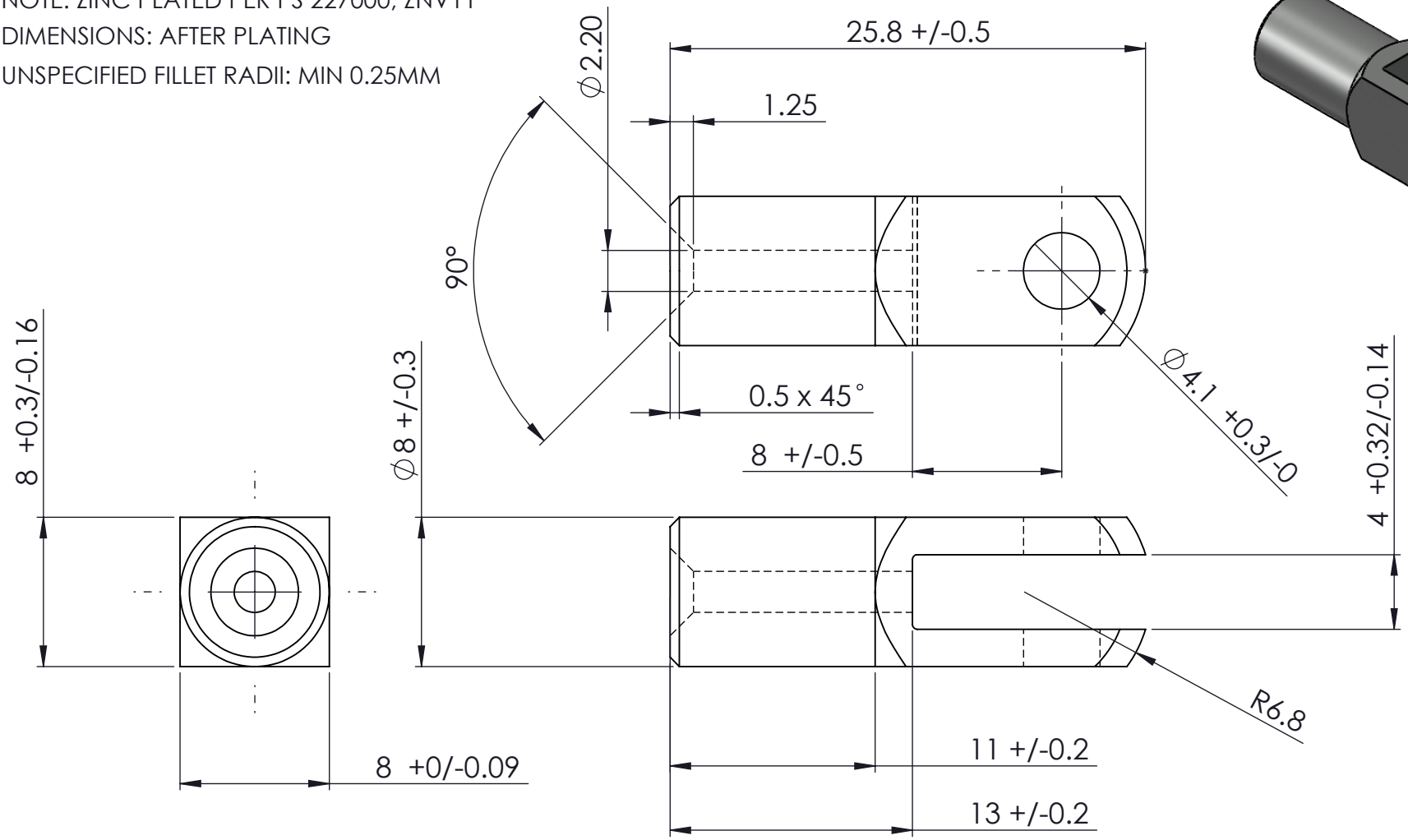

GENERAL TOLERANCE (UNLESS OTHERWISE STATED): X +/-1, X.X +/-0.5, X.XX +/-0.25

DIMENSIONS ARE IN MILLIMETRES UNLESS OTHERWISE SPECIFIED

©COPYRIGHT; BARNES GROUP UK

THIS DRAWING IS THE PROPERTY OF AS RAYMOND/ BARNES GROUP UK AND SHALL NOT BE USED EXCEPT UPON PRIOR WRITTEN PERMISSION OF AS RAYMOND/ BARNES GROUP UK FOR ANY PURPOSE EXCEPT THE MANUFACTURE OF ARTICLES FOR AS RAYMOND/ BARNES GROUP UK. TO BE RETURNED UPON REQUEST

REV	DESCRIPTION	DATE	APPROVED
A	First Issue	10.07.25	CJE

ASRaymond
Evesham, Worcs, UK A Business of BARNES

DRAWN BY: CJE
DATE: 10.07.25
ENGINEER: CJE
RELEASE DATE

TITLE 4mm CLEVIS
MATERIAL Mild Steel - see note
DWG No: X390710250140P
REV A
SCALE ---
SHEET 1 OF 1
REF: E16895